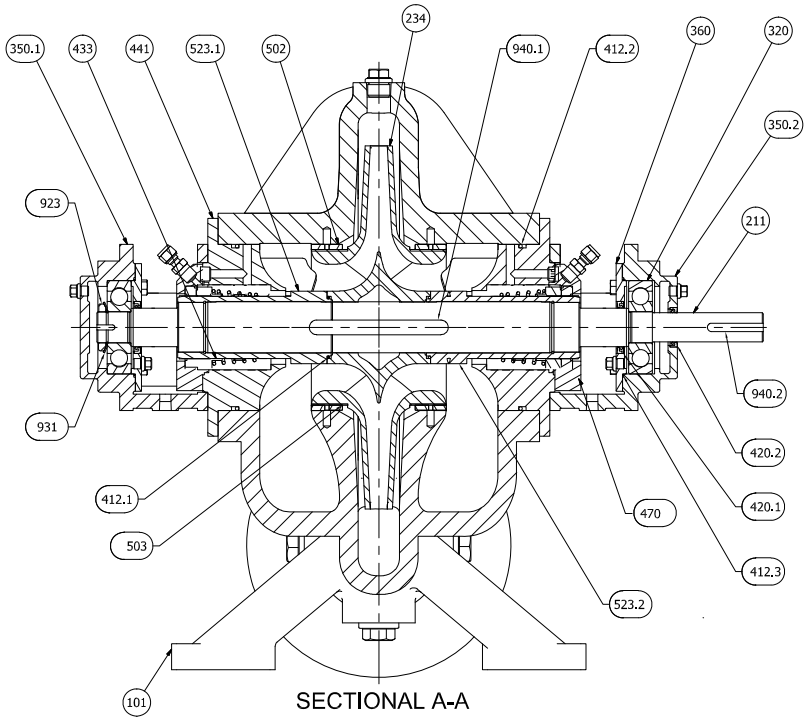

SECTIONAL A-A

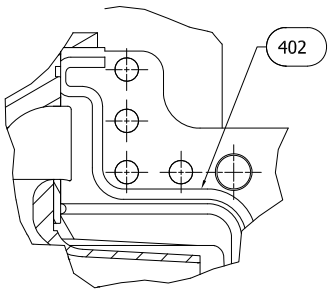

VIEW B

PART LIST

ITEM	DESCRIPTION	MATERIAL	QTY
101	PUMP CASING	ASTM A 48 Cl. 35B	1
211	PUMP SHAFT	ASTM A 276 Type 420 - UNS S42000	1
234	DOUBLE ENTRY IMPELLER	ASTM A 351 Gr. CF8M - UNS J92900	1
320	ANTI-FRICTION BEARING	STEEL	2
350.1	BEARING HOUSING (NDE)	ASTM A 48 Cl. 35B	1
350.2	BEARING HOUSING (DE)	ASTM A 48 Cl. 35B	1
360	BEARING COVER	ASTM A 576 Gr. 1045 - UNS G10450	2
402	PLASTIC SEALING (O-BAND)	NEOPRENE	144 in.
412.1	O-RING (SLEEVE)	NEOPRENE	2
412.2	O-RING (STUFFING BOX)	NEOPRENE	2
412.3	O-RING (BEARING HOUSING)	NEOPRENE	2
420.1	SHAFT SEAL (BEARING COVER)	Nitrile rubber	2
420.2	SHAFT SEAL (BEARING HOUSING)	Nitrile rubber	1
433	MECHANICAL SEAL	- - - -	-
441	STUFFING BOX	ASTM A 48 Cl. 35B	2
470	SEAL GLAND	ASTM A 351 Gr. CF8M - UNS J92900	2
502	CASING WEAR RING	ASTM A 48 Cl. 35B	2
503	IMPELLER WEAR RING	ASTM A 487 Gr. CA6NM Class A	2
523.1	SHAFT SLEEVE (RH)	ASTM A 276 Type 316 - UNS S31600	1
523.2	SHAFT SLEEVE (LH)	ASTM A 276 Type 316 - UNS S31600	1
923	BEARING NUT	Carbon Steel	1
931	LOCKWASHER	Carbon Steel	1
940.1	KEY (IMPELLER)	ASTM A 576 Gr. 1045 - UNS G10450	1
940.2	KEY (COUPLING)	ASTM A 576 Gr. 1045 - UNS G10450	1

CUSTOMER DATA

CUSTOMER:	FISAE
CUSTOMER P.O.:	– – – –
END USER:	EMPRESA DE SERVICIOS SANITARIOS DEL PARAGUAY
LOCATION:	ASUNCION, PARAGUAY
SERVICE:	ESTACION DE BOMBEO 3 Y 4 ADUCTORA (MX)

ITEM NO'S

PUMP NO.	DRIVER NO.	RP. JOB NO.
010	– – – –	152400059

DRIVER

MANUFACTURER:	– – – –		
MODEL:	– – – –	VOLTS:	600
POWER:	560 KW	PHASES:	3
ENCLOSURE:	– – – –	CYCLES:	50
FRAME:	400L/A/B/C	RPM:	1488

STANDARD PACKING

MANUFACTURER:	– – – –
SIZE:	NON CARTRIDGE
MATERIAL:	Single Bellows Seal / Carbon vs. Ceramic.

COUPLING

MANUFACTURER:	----
MODEL:	----
SIZE:	14S
GUARD MATERIAL:	STEEL

DRAWING REFERENCE

DRAWING TITLE	DRAWING NUMBER
GENERAL ARRANGEMENT	7708670635
PIPING XX	----
VENDOR	----
VENDOR	----

PUMP LUBRICATION

BEARING BRACKET LUB:	GREASE LUB
BEARING BRACKET COOLING:	AIR COOLING

WEIGHTS

PUMP:	3029	LBS	1374	KG
PULL OUT:	0.0	LBS	0.0	KG
COUPLING:	0.0	LBS	0.0	KG
BASEPLATE:	0.0	LBS	0.0	KG
DRIVER:	7716	LBS	3150	KG
TOTAL:	0.0	LBS	0.0	KG

FORCES & MOMENTS

.89 API 610 FORCES & MOMENTS
F=FORCE (LBS)
M=MOMENT (FT-LBS)
R=RESULTANT

	SUCT	DISCH
FX	1424	1068
FY	1780	1335
FZ	1157	890
FR	2581	1958
MX	4183	3293
MY	2047	1602
MZ	3115	2492
MR	5607	4450

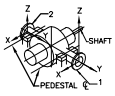

DIMENSIONS AND TOLERANCES PER ASME-Y14.5-2009

UNLESS OTHERWISE SPECIFIED DIMENSIONS ARE IN INCHES

TOLERANCES	DECIMALS
X	±.50 [13]
.X	±.25 [6]
.XX	±.12 [3]

APPROVAL DRAWING NOTES

1. PURCHASER'S COMMENTS AND/OR CORRECTIONS, WITHIN THE SCOPE OF CONTRACT, WILL BE MADE ON THE FIRST COMPLETED CERTIFIED DRAWING SUBMITTED BY RUHRPUMPEN INC. PUMP DIVISION AND RETURNED FOR CORRECTION.
2. CORRECTIONS, ALTERATIONS, ADDITIONS, AND/OR MODIFICATIONS OUTSIDE SCOPE OF CONTRACT OR MADE AFTER FIRST SUBMITTAL, WILL BEGIN AN ENGINEERING SERVICE CHARGE AND MAY CHANGE PRICE.
3. ITEMS CONTAINED THEREIN NOT REQUESTED OR DEFERRED APPROVAL BY PURCHASER, MUST BE CONSIDERED FINAL, DELIVERY MAY BE AFFECTED.
4. FOR ORDERS WITH "HOLD FOR APPROVAL" DOCUMENTATION, RELEASE FROM MANUFACTURE MUST OCCUR NO MORE THAN 30 DAYS FROM CUSTOMER'S RECEIPT OF APPROVAL DOCUMENTATION. OTHERWISE BOTH PRICE INCREASE AND DELIVERY EXTENSION MAY BE APPLIED.

PROPRIETARY NOTE

THIS MATERIAL IS THE PROPERTY OF RUHRPUMPEN INC. AND IS FURNISHED FOR THE PURPOSE INDICATED. ANY AND ALL CONFIDENTIAL, PROPRIETARY, PATENT, AND OTHER RIGHTS IN THE SUBJECT MATTER BEING RETAINED, INCLUDING ANY EXCLUSIVE RIGHTS OF USE AND/OR MANUFACTURE AND/OR SALE OR POSSESSION OF THE DRAWING, DESIGN, SUBJECT MATTER OR PRODUCTS THEREIN OR PRODUCED THEREBY, OR WHICH FOR PART OF MANUFACTURE, USE OR SUBJECT MATTER SHOWN THEREIN OR PRODUCED THEREBY, ARE RESERVED. NO INFORMATION THEREON, SUCH PERMISSION TO BE GRANTED ONLY BY AN OFFICER OR OTHER AUTHORIZED AGENT OF RUHRPUMPEN INC., ITS DIVISIONS OR SUBSIDIARIES.

DRAWING STATUS

- [ ] FOR PROPOSAL ONLY — NOT CERTIFIED – FOR PROPOSAL ONLY NOT TO BE USED FOR CONSTRUCTION
- [x] FOR INFORMATION ONLY — NO RETURN REQUIRED
- [ ] FOR APPROVAL — DRAWING MUST BE RETURNED BY TWO WEEKS FROM CUSTOMER RECEIPT DATE TO MAINTAIN THE DELIVERY SCHEDULE
- [ ] RE-ISSUE FOR REVIEW OF CHANGES ONLY — MANUFACTURING PROCESS HAS BEEN STARTED – ANY OTHER REQUESTED CHANGES WILL AFFECT PRICE AND DELIVERY
- [ ] FINAL — MANUFACTURING PROCESS HAS BEEN STARTED – ANY OTHER REQUESTED CHANGES WILL AFFECT PRICE AND DELIVERY

REV	REVISION COMMENT	BY	CHECKED	DATE
A	FOR INFORMATION ONLY	ARM	PDL	MAR/11/21

DRAWN BY: ARM	DATE: MAR/11/21	RUHRPUMPEN	
RELEASED BY: PDL	DATE: MAR/11/21		
DRAWING TITLE: SECTIONAL DRAWING ZW 14X10X24 – 400L			
SIZE: B	DRAWING NO.: 7718670635		REV: A
SCALE: N/A	PUMP SIZE: 14X10X24	PUMP TYPE: ZW	SHEET:SHEETS 1 OF 1

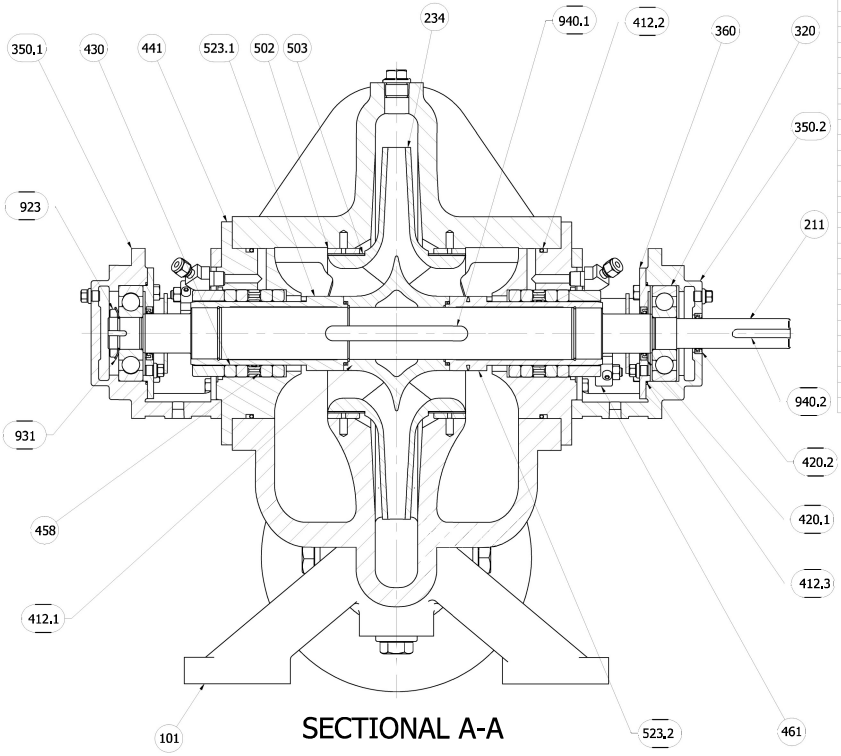

SECTIONAL A-A

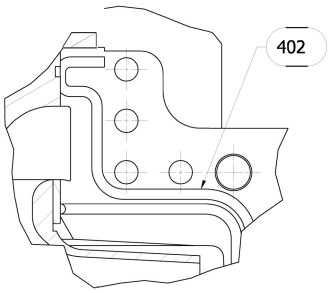

VIEW B

PART LIST

ITEM	DESCRIPTION	MATERIAL	QTY
101	PUMP CASING	ASTM A 48 Cl. 35B	1
211	PUMP SHAFT	ASTM A 276 Type 420 - UNS S42000	1
234	DOUBLE ENTRY IMPELLER	ASTM A 351 Gr. CF8M - UNS J92900	1
320	ANTI-FRICTION BEARING	STEEL	2
350.1	BEARING HOUSING (NDE)	ASTM A 48 Cl. 35B	1
350.2	BEARING HOUSING (DE)	ASTM A 48 Cl. 35B	1
360	BEARING COVER	ASTM A 576 Gr. 1045 - UNS G10450	2
402	PLASTIC SEALING (O-BAND)	NEOPRENE	143 in.
412.1	O-RING (SLEEVE)	NEOPRENE	2
412.2	O-RING (STUFFING BOX)	NEOPRENE	2
412.3	O-RING (BEARING HOUSING)	NEOPRENE	2
420.1	SHAFT SEAL (BEARING COVER)	Nitrile rubber	2
420.2	SHAFT SEAL (BEARING HOUSING)	Nitrile rubber	1
430	PACKING	PTFE	189 in
441	STUFFING BOX	ASTM A 48 Cl. 35B	2
461	PACKING GLAND	ASTM A 351 Gr. CF8M - UNS J92900	4
458	LANTERN RING	ASTM A 351 Gr. CF8M - UNS J92900	2
502	CASING WEAR RING	ASTM A 48 Cl. 35B	2
503	IMPELLER WEAR RING	ASTM A 487 Gr. CA6NM Class A	2
523.1	SHAFT SLEEVE (RH)	ASTM A 276 Type 316 - UNS S31600	1
523.2	SHAFT SLEEVE (LH)	ASTM A 276 Type 316 - UNS S31600	1
754	BALL VALVE	AISI 316	2
923	BEARING NUT	Carbon Steel	1
931	LOCKWASHER	Carbon Steel	1
940.1	KEY (IMPELLER)	ASTM A 576 Gr. 1045 - UNS G10450	1
940.2	KEY (COUPLING)	ASTM A 576 Gr. 1045 - UNS G10450	1

CUSTOMER DATA

CUSTOMER:
CUSTOMER P.O.:
END USER:
LOCATION:
SERVICE:

ITEM NO'S

PUMP NO.	DRIVER NO.	RP. JOB NO.

DRIVER

MANUFACTURER:	----		
MODEL:	----	VOLTS:	----
POWER:	----	PHASES:	----
ENCLOSURE:	----	CYCLES:	----
FRAME:	----	RPM:	----

STANDARD PACKING

MANUFACTURER:	STANDARD PACKING
SIZE:	
MATERIAL:	

COUPLING

MANUFACTURER:	----
MODEL:	----
SIZE:	----
GUARD MATERIAL:	----

DRAWING REFERENCE

DRAWING TITLE	DRAWING NUMBER
OUTLINE	7708670659
PIPING XX	----
VENDOR	----
VENDOR	----

PUMP LUBRICATION

BEARING BRACKET LUB:	GREASE LUB
BEARING BRACKET COOLING:	AIR COOLED

WEIGHTS

PUMP:	3029	LBS	1374	KG
PULL OUT:	0.0	LBS	0.0	KG
COUPLING:	0.0	LBS	0.0	KG
BASEPLATE:	0.0	LBS	0.0	KG
DRIVER:	0.0	LBS	0.0	KG
TOTAL:	0.0	LBS	0.0	KG

FORCES & MOMENTS

.89 API 610 FORCES & MOMENTS
F=FORCE (LBS)
M=MOMENT (FT-LBS)
R=RESULTANT

	SUCT	DISCH
FX	1424	1068
FY	1780	1335
FZ	1157	890
FR	2581	1958
MX	4183	3293
MY	2047	1602
MZ	3115	2492
MR	5607	4450

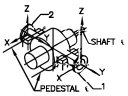

DIMENSIONS AND TOLERANCES PER ASME-Y14.5-2009

UNLESS OTHERWISE SPECIFIED DIMENSIONS ARE IN INCHES

TOLERANCES	DECIMALS
X	±.50 [13]
.X	±.25 [6]
.XX	±.12 [3]

APPROVAL DRAWING NOTES

1. PURCHASER'S COMMENTS AND/OR CORRECTIONS, WITHIN THE SCOPE OF CONTRACT, WILL BE MADE ON THE FIRST COMPLETED CERTIFIED DRAWING SUBMITTED BY RUHRPUMPEN INC. PUMP DIVISION AND RETURNED FOR CORRECTION.
2. CORRECTIONS, ALTERATIONS, ADDITIONS, AND/OR MODIFICATIONS OUTSIDE SCOPE OF CONTRACT OR MADE AFTER FIRST SUBMITTAL WILL INCURR AN ENGINEERING SERVICE CHARGE AND MAY CHANGE PRICE.
3. DRAWINGS, DATA SHEETS, AND/OR MANUALS REFERRED APPROVAL BY PURCHASER, MUST BE THOROUGHLY STUDIED, REVIEWED AND REFLECTED.
4. FOR ORDERS WITH "HOLD FOR APPROVAL" DOCUMENTATION, RELEASE FROM MANUFACTURE MUST OCCUR NO MORE THAN 30 DAYS FROM CUSTOMER'S RECEIPT OF APPROVAL DOCUMENTATION. OTHERWISE BOTH PRICE INCREASE AND DELIVERY EXTENSION MAY BE APPLIED.

PROPRIETARY NOTE

THIS MATERIAL IS THE PROPERTY OF RUHRPUMPEN INC. AND IS FURNISHED FOR THE PURPOSE INDICATED. ANY AND ALL CONFIDENTIAL, PROPRIETARY, PATENT, AND OTHER RIGHTS IN THE SUBJECT MATTER BEING RETAINED (INCLUDING ANY EXCLUSIVE RIGHTS OF USE AND/OR MANUFACTURE AND/OR SALE OR POSSESSION OF THE MATERIAL SUBJECT MATTER) BY RUHRPUMPEN INC. MAY BE DAMAGED BY THE DISCLOSURE OF THIS MATERIAL OR PART OF THE MATERIAL SUBJECT MATTER. RUHRPUMPEN INC. RETAINS ALL RIGHTS TO THE MATERIAL OR PARTS OF INFORMATION THEREON. SUCH PERMISSION TO BE GRANTED ONLY BY AN OFFICER OR OTHER AUTHORIZED AGENT OF RUHRPUMPEN INC., IT'S DIVISIONS OR SUBSIDIARIES.

DRAWING STATUS

- [ ] FOR PROPOSAL ONLY — NOT CERTIFIED – FOR PROPOSAL ONLY NOT TO BE USED FOR CONSTRUCTION
- [x] FOR INFORMATION ONLY — NO RETURN REQUIRED
- [ ] FOR APPROVAL — DRAWING MUST BE RETURNED BY TWO WEEKS FROM CUSTOMER RECEIPT DATE TO MAINTAIN THE DELIVERY SCHEDULE
- [ ] RE-ISSUE FOR REVIEW OF CHANGES ONLY — MANUFACTURING PROCESS HAS BEEN STARTED – ANY OTHER REQUESTED CHANGES WILL AFFECT PRICE AND DELIVERY
- [ ] FINAL — MANUFACTURING PROCESS HAS BEEN STARTED – ANY OTHER REQUESTED CHANGES WILL AFFECT PRICE AND DELIVERY

REV	REVISION COMMENT	BY	CHECKED	DATE
A	FOR INFORMATION ONLY	ARM	PDL	DIC/22/20

DRAWN BY: ARM	DATE: DIC/22/20	RUHRPUMPEN
RELEASED BY: PDL	DATE: DIC/22/20	

DRAWING TITLE:
SECTIONAL DRAWING
ZW 14x10x24 (F)

SIZE:	DRAWING NO.:	REV:
B	7718670659	A

SCALE:	PUMP SIZE:	PUMP TYPE:	SHEET:SHEETS
N/A	14X10X24(F)	ZW	1 OF 1